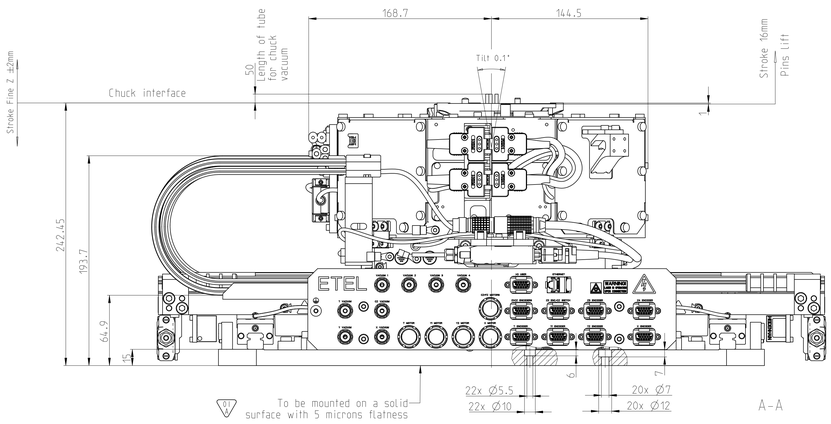

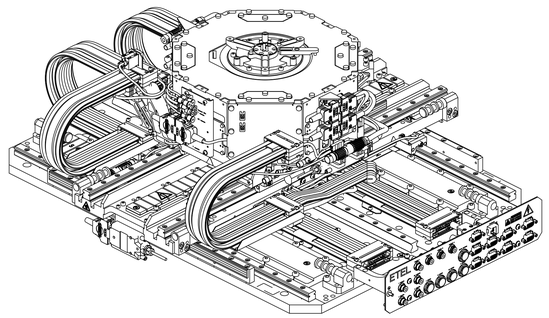

3:10

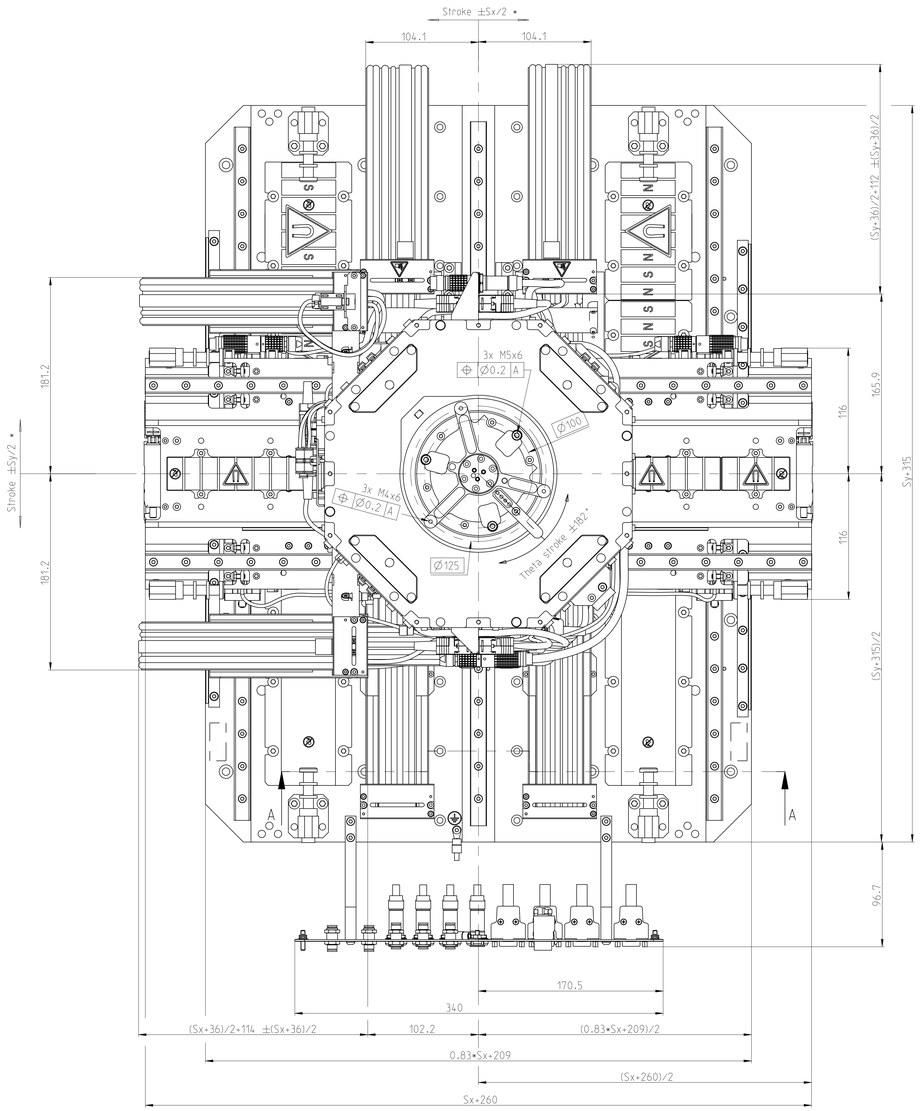

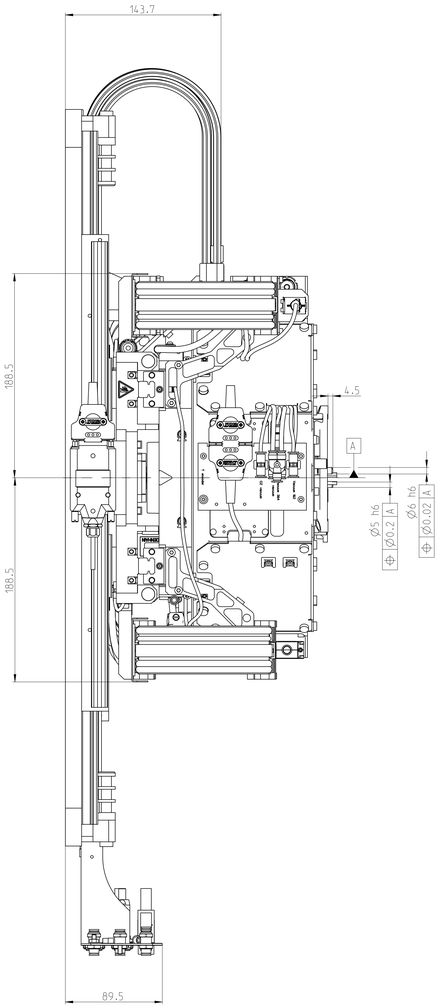

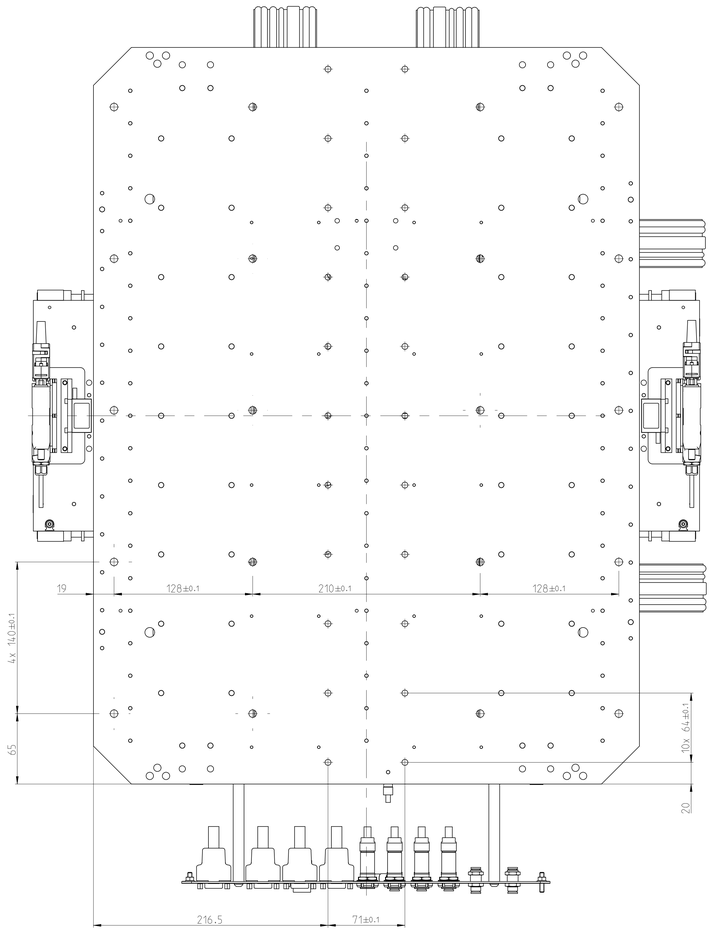

* User stroke
Extra stroke for damper compression 18mm max

Stroke X = Sx
Stroke Y = Sy

Travel and travel-dependent dimensions must be confirmed by ETEL whenever a customization takes place

Test : -		1191783-01
Release n° : E049575-05	Non serial	Part number
Material :	-	
Treatment:	-	
Edges of undefined shape ISO 13715	-	

	Drawn	Checked	Approved
XYZ3TH STACKED SYSTEM (GENERIC)	Drawal 16.12.2016		

ETEL S.A. 2702 Môtiers SWITZERLAND

This document is the property of ETEL and is submitted in confidence. Disclosure, reproduction or use without written authorisation is prohibited.

Projection	Size	Scale	Ocd n° 2003e Vulcano	Version	Revision	Sheet	Page
	A0	1:2	1191759	01	A	01	1/1

Original — Document number